Adaptive Darkness-Driven High-Frequency Pulse Generator Using 555 Timer
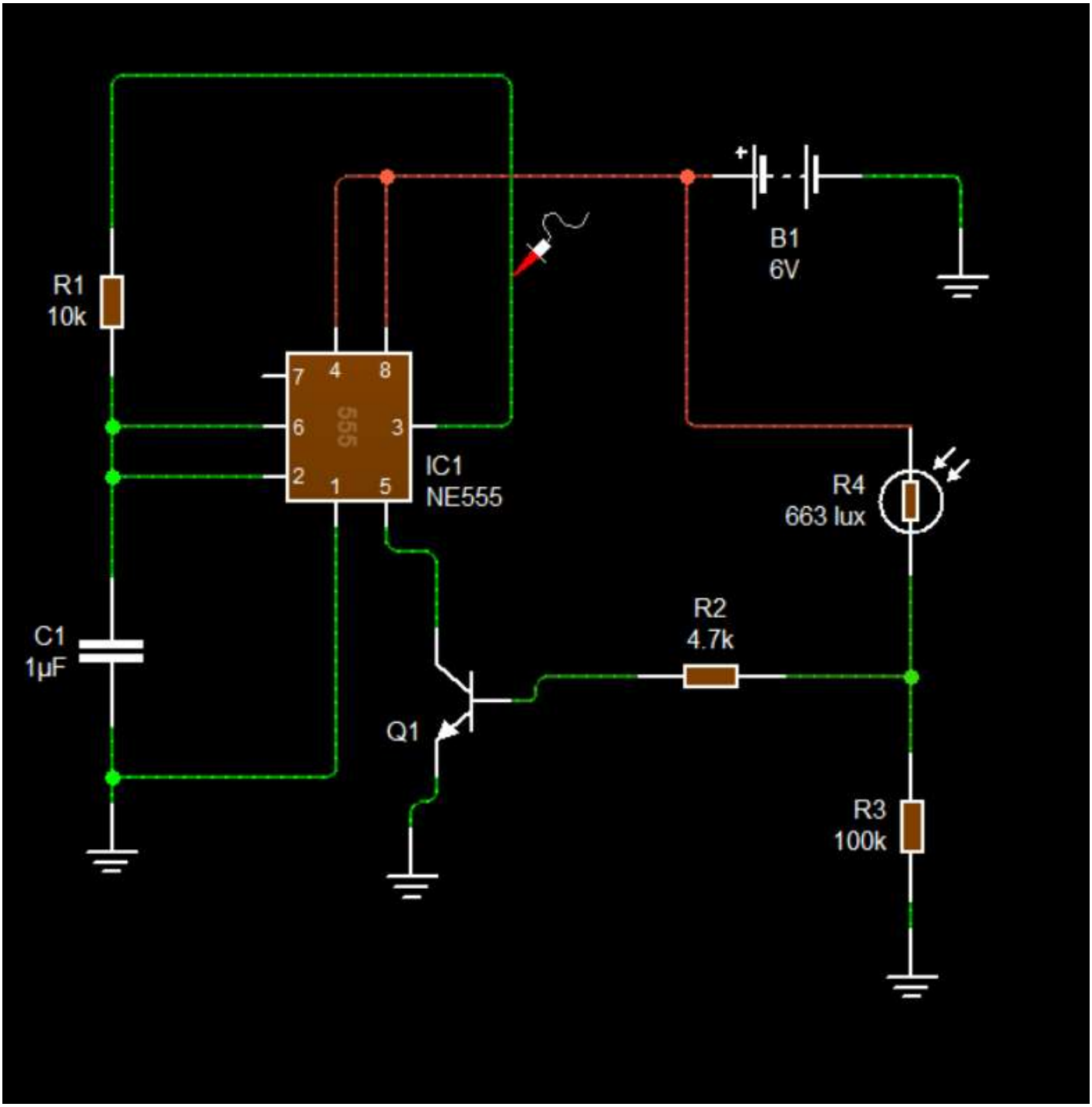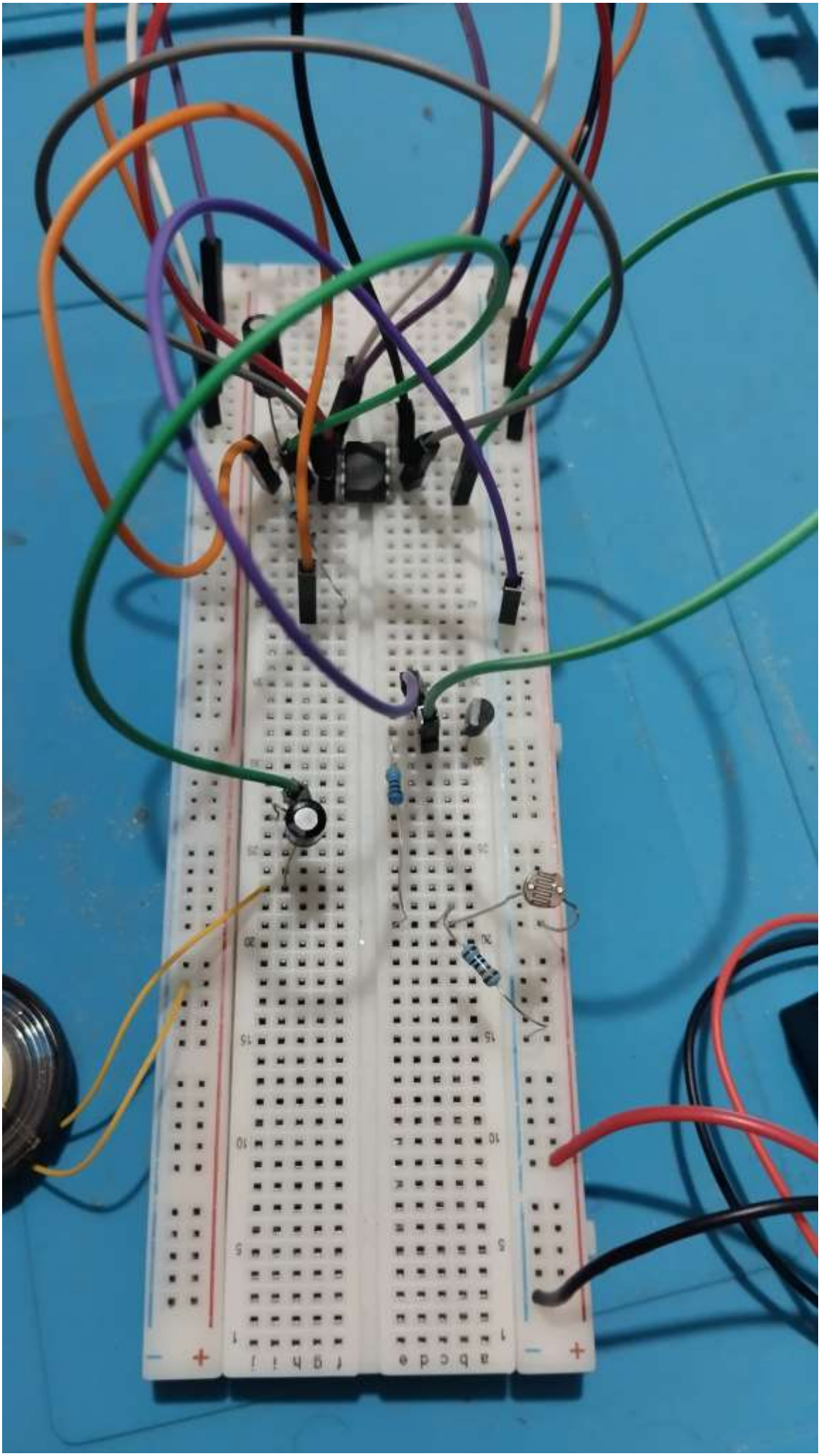
This project is a light-sensitive signal generator built around the NE555 timer IC, designed to produce higher-frequency pulses with a progressively lower duty cycle as ambient light decreases. An LDR (Light Dependent Resistor) is used to detect light intensity and dynamically influence the timing characteristics of the circui